电机型号/MODEL:EC80TM6030750-E

版本号： V1.0

基本参数/BASIC PARAMETRS			
额定功率(w): Rated Output(w):	750	极数: Number of Poles:	20
额定电压(v): Rated Voltage(v):	DC60	耐热等级: Vibration Class:	F
额定转速(rpm): Rated Speed(rpm):	3000	最高转速(rpm): Max. Speed(rpm):	3100
额定电流(Arms): Rated Current(Arms):	15.5±10%	瞬时最大电流(Arms): Instantaneous Max. Current(Arms):	31±10%
额定扭矩(N.m): Rated Torque(N.m):	2.4	瞬时最大扭矩(N.m): Instantaneous Peak Torque(N.m):	4.8
线电阻(Ω): Line Resistance(Ω):	0.222±10%(25℃)	线电感(mH): Line Inductance(mH):	0.226±20%(25℃)
线反电势(V/krpm): Line Back EMF.(V/krpm):	9.35±10%	力矩系数(N.m/A): Torque Coeffcient(N.m/A):	0.16±10%
转子惯量(Kg.m²x10⁻⁴): Rotor Moment of Inertia(Kg.m²x10⁻⁴):	1.64±10%	反馈元件: Feedback Component:	磁电增量式/Incremental Encoder,2500PPR
保持制动器扭矩(N.m): Static Torque (N.m):	/	保持制动器工作电压(V): Rated Voltage(V):	/
绝缘电阻(MΩ): Insulation Resistance(MΩ):	DC500V, >20MΩ	噪音(dB): Noise(dB):	≤60dB,无异响/NoneSpecial Noise
工作时间: Time rating.:	连续 Continuous	振动等级: Vibration Class:	V 15
环境温度: /Ambient Temperature:	-20~+40℃	环境湿度: Ambient Humidity:	20~80%不结露 20~ 80% No Condensation
励磁方式: Excitation:	永磁式 Permanent Magnet	安装方式: Mouting:	法兰式 Flange Method
连接方式: Drive Method:	直接连接 Direct Drive	电机重量(Kg): Weight(kg):	1.8
保护方式: Enclosure:	全封闭，自冷IP54(IP65可选)(轴贯通部分除外) Totally Enclosed, Self-cooled, IP54(IP65 optional) (except for shaft opening)		
旋转方向: Rotation Direction:	从电机轴伸端看逆时针方向旋转(CCW) Counterclockwise rotation(CCW)		

※额定转矩表示安装在200x200x6的铝制散热板上且在环境温度40℃时的连续容许转矩值。/Rated torque is the continuous allowable torque at 40℃ with an Al heatsink of 200x200x6.

连接器/CONNECTORS

动力插座/Power Line Socket

颜色 colour	黄绿	红	蓝	黑
信号引线 Signal leads	PE	U	V	W

编码器插座/Encoder Socket(DB15 PIN 公头)

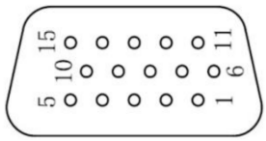

插座编号 Socket Numbers	1	2	3	4	5	6	7	8	9	10	11	12	13	14	15
颜色 colour			棕	红	黑	灰	黄黑	黄	白		绿黑	绿	蓝黑	蓝	
信号引线 Signal leads			U+	5V	0V	V+	Z-	Z+	W+		B-	B+	A-	A+	

编码器零点与电机相位关系

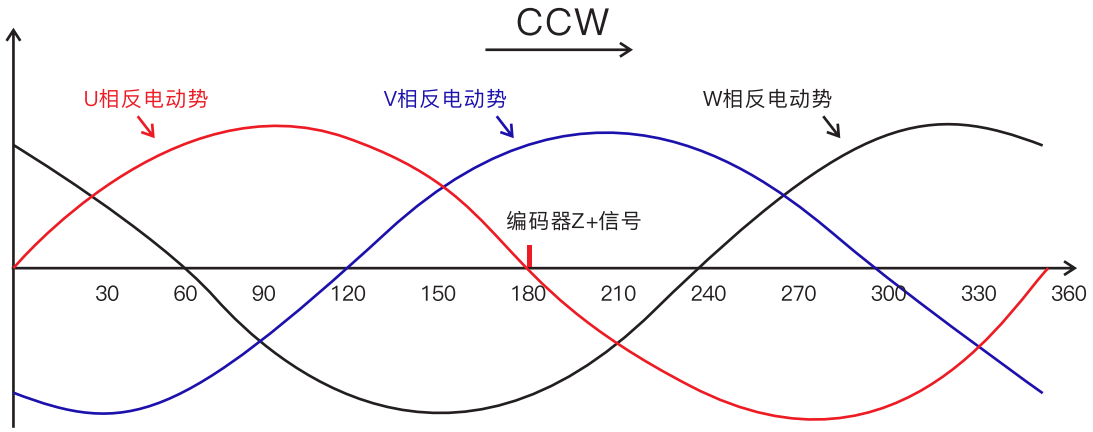

转矩—转速特性/TORQUE-SPEED CHARACTERISTICS

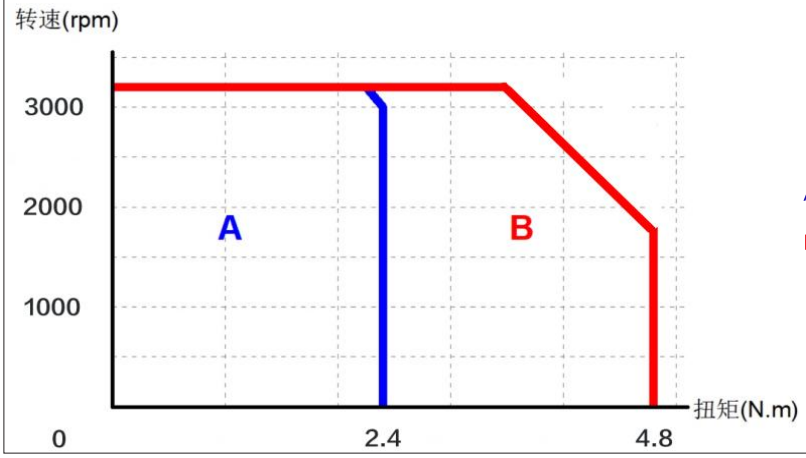

A:连续使用区域/Continuous Duty Zone

B:反复使用区域/Intermittent Duty Zone

过载特性曲线/OVERLOAD CHARACTERISTICS

工作时间在电机环境温度40℃以及热起动的条件下设定/The characteristics is measured in the warm-boot conditions at 40℃

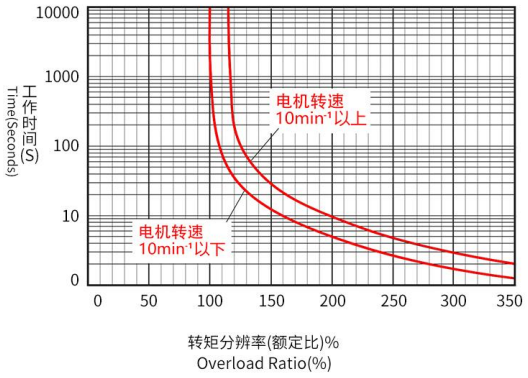

※1:上述过载特性并不保证100%以上输出的连续使用/
The above characteristics do not supply 100% output for continuous running;

※2:使用时，请确保有效转矩在“转矩-转速特性”的连续使用范围内/
Please make sure that the effective torque is in the range of T-N characteristics' continuous duty zone。

※3:由于产品改良或规格变更，我们会适时对规格书进行更新，请关注相关信息，恕不另行通知。/
Specification are subject to change without notice for ongoing product modification and improvement, please pay more attentions to the

Front view and mounting

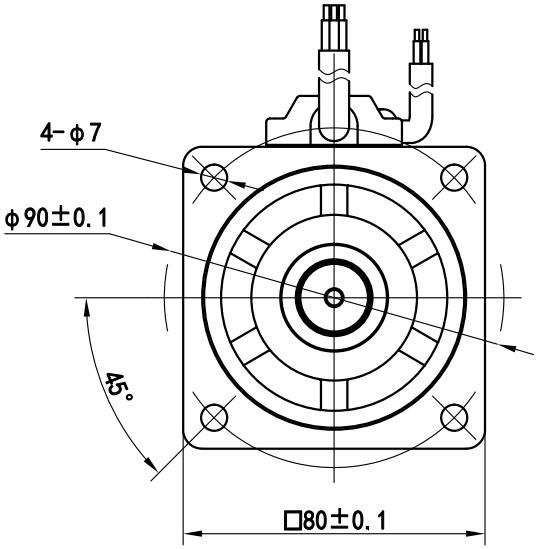

Side view

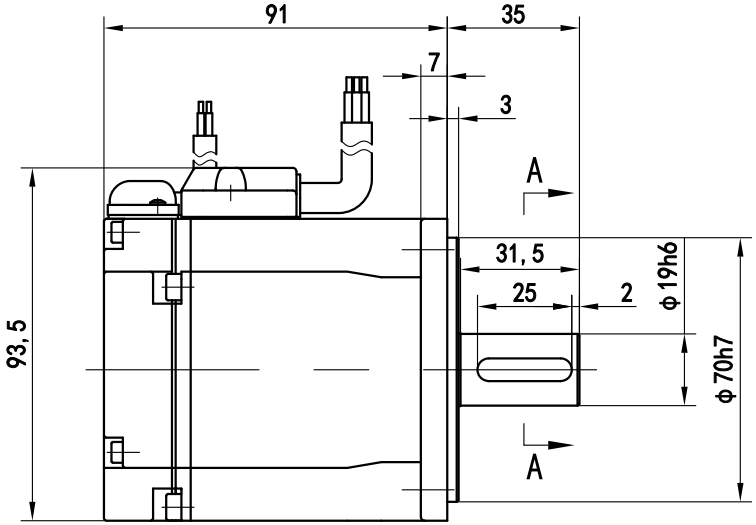

A-A

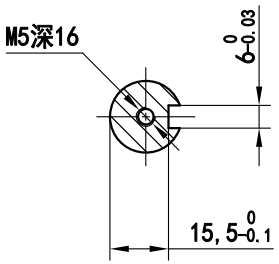

WWW.YANLANMC.COM/WWW.YANLAN.NET

DC SERVO MOTOR 直流伺服电机

RoHS COMPLIANT CE

版本 Edition	变更内容 Revisions	设计 Designed	日期 DATE
C			
B			
A	初版/First Edition		

型号 Model	80#一体机壳L=91						
批准 Approved	J.Song	20.10.26		材质 Material			
审核 Checked	CB.Y	20.10.26		公差 Tolerance	±0.2	No.	Sheet
制图 Drawn	QC.Y	20.10.26		比例 Scale	1:1	页 Sheet	1/1