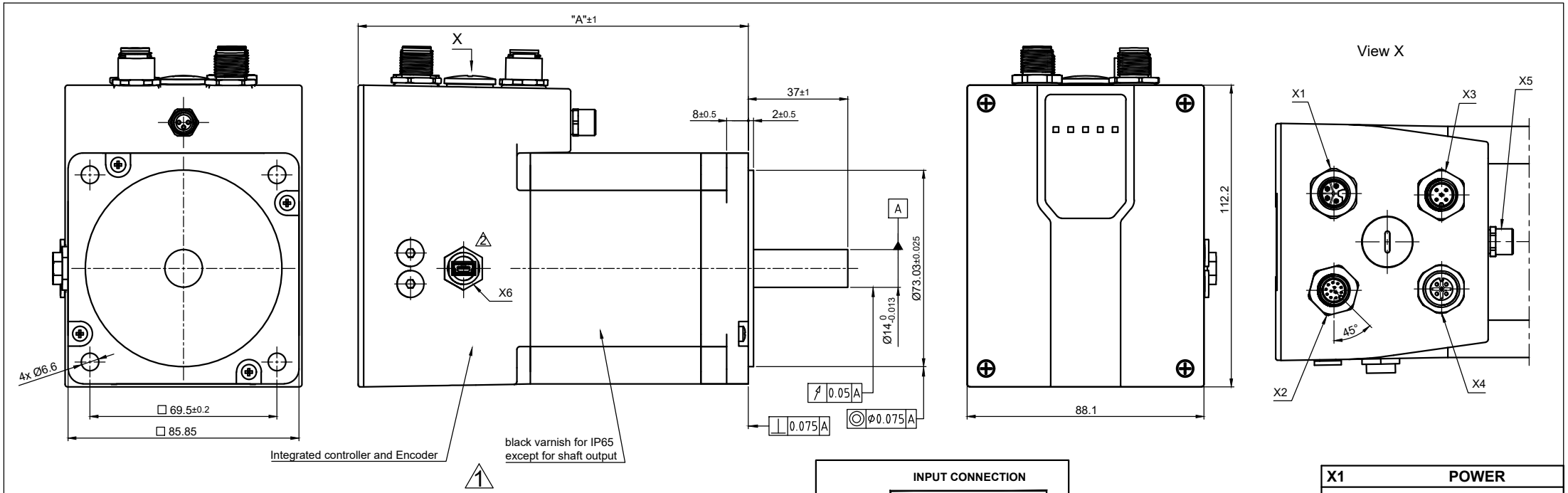

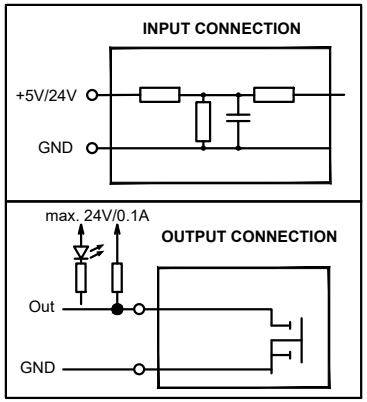

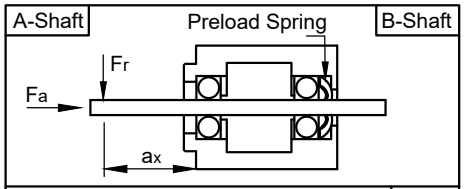

Max. Axial Force	Fa	N	65
Max. Radial Force	Fr (a1 = 20 mm)	N	200
Radial Play	Fr = 5 N	mm	0.03

X1	POWER
M12 / 4-Pole / L-Coding / male	
Pin No.	Function
1	+UB
2	+UB
3	GND
4	GND

X3	CANopen IN
M12/ 5-Pole / A-Coding / male	

X4	CANopen OUT
M12/ 5-Pole / A-Coding / female	
Pin No.	Function
1	CAN_SHLD
2	+UB Logic (24V)
3	GND
4	CAN+
5	CAN-

X5	Brake OUT
M8/ 3-Pole / A-Coding / female	
PIN No.	Function
1	Brake
3	Brake GND
4	N.C.

X6	Mini-USB

X2	IO
M12 / 12-Pole / A-Coding / male	
Pin No.	Function
1	GND
2	Input 1 (+5V/+24V)
3	Input 2 (+5V/+24V)
4	Input 3 (+5V/+24V)
5	Input 4 (+5V/+24V)
6	Input 5 (+5V/+24V)
7	Input 6 (+5V/+24V)
8	Analog Input (0-10V/0-20mA)
9	Output 1 (open drain)
10	Output 2 (open drain)
11	+5V Voltage Supply (max. 100mA)
12	+UB Logic (24V)

MOTOR SPECIFICATION							
PD6-E891xxx-x-65-2		S95-M	S95-E	M95-M	M95-E	L95-M	L95-E
Motor Length "**A**"	mm	2 112		145		175	
Min. Operating Voltage	V DC	12					
Nominal Operating Voltage	V DC	48					
Max. Operating Voltage	V DC	57.6					
Current per Winding	A	9.5					
Step Angle ±5%	°	1.8					
Holding Torque	Nm	3.2		5.94		9.33	
Rotor Inertia	kg m²	100 x10^{-6}		190 x10^{-6}		300 x10^{-6}	
Multiturn Encoder Resolution	bit	17	-	17	-	17	-
Singleturn Encoder Resolution	bit	16	12	16	12	16	12
Weight	kg	~2.5		~3.7		~5.0	

GENERAL MOTOR SPECIFICATION		
Interface		CANOPEN
Ambient Temperature	°C	-10 ... 40
Switch-off Temperature	°C	75
Max. Ambient Humidity (non condensing)	%	85
Protection Class (except shaft outlet)		IP65
Protection Class (shaft outlet)		IP54

ISO 8015	ISO 1302	ISO 2768 cK	ISO 13715

REV	Rev. Text	Name	Date
02	change length S Motor	Schneid_A	31.08.2022
01	added remarks	Rehse_P	17.08.2022

	Date	Name
Drawn	19.05.2022	Schneid_A
Reviewed	02.08.2022	Rehse_P
Released	02.08.2022	Rehse_P

Nanotec® PLUG & DRIVE

PD6-E891x95-x-65-2-CYL

20001497

A4 Page 1

State: Released | Rev: 02 | CONFIDENTIAL