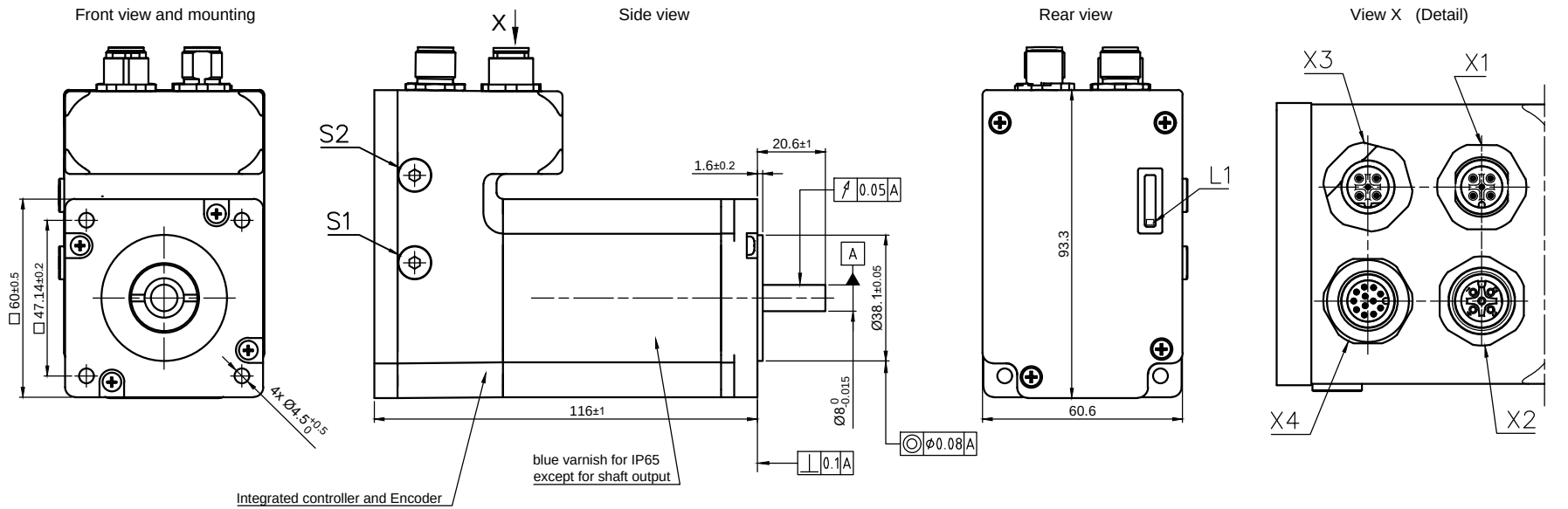

X1	CANopen IN
M12/ 5-Pole / A-Coding / male	
X2	**CANopen OUT**
M12/ 5-Pole / A-Coding / female	
Pin No.	Function
1	CAN_SHLD
2	+UB Logic (24V)
3	GND
4	CAN+
5	CAN-

X3	POWER
M12 / 5-Pole /B-Coding / male	
Pin No.	Function
1	+UB (12-48V)
2	+UB (12-48V)
3	GND
4	GND
5	N.C.

X4	IO
M12 / 12-Pole / A-Coding / male	
Pin No.	Function
1	GND
2	Input 1 (+5V/+24V)
3	Input 2 (+5V/+24V)
4	Input 3 (+5V/+24V)
5	Input 4 (+5V/+24V)
6	Input 5 (+5V/+24V)
7	Input 6 (+5V/+24V)
8	Analog Input (0-10V/0-20mA)
9	Output 1 (open drain)
10	Output 2 (open drain)
11	+5V Voltage Supply (max. 100mA)
12	+UB Logic (24V)

MOTOR SPECIFICATION			
Min. Operating Voltage	V DC	12	
Max. Operating Voltage	V DC	48	
Current per Winding	A	4.2	
Holding Torque	Nm	3.54	
Step Angle	°	1.8	±5%
Rotor Inertia	kg m²	84	$x10^{-6}$
Singleturn Encoder Resolution	bit	12	

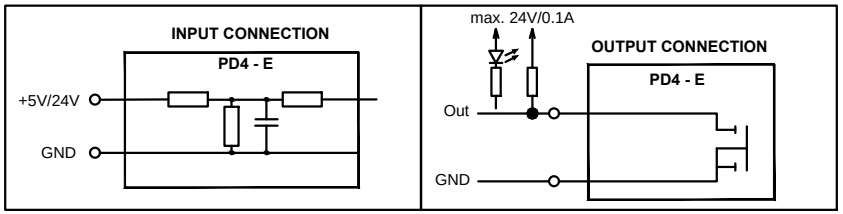

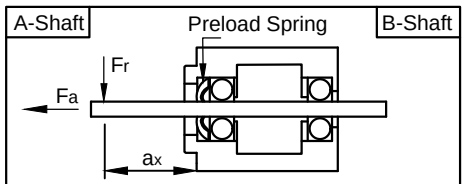

Max. Axial Force	Fa	N	15
Max. Radial Force	Fr (a1 = 20 mm)	N	52
Axial Play	Fa = 200N	mm	0.2
Radial Play	Fr = 4.5 N	mm	0.02

GENERAL MOTOR SPECIFICATION		
Interface		CANOPEN
Ambient Temperature	°C	Min. -10 Max. 40
Switch-off Temperature	°C	75
Max. Ambient Humidity (non condensing)	%	85
Insulation Class		B
Insulation Resistance	MΩ	100
Dielectric Strength (for 1 min - coil to case)	V AC	500
Protection Class (exept shaft outlet)		IP65

ISO 8015	ISO 1302	ISO 2768-1 cK	ISO 13715

REV	Rev. Text	Name	Rel. Date

	Date	Name
Drawn	04.12.2017	Import
Checked	11.01.2018	Wang_X
Approved	11.01.2018	Wang_X

Nanotec® PLUG & DRIVE

Weight: 1.5 kg

PD4-E601L42-E-65-2-CYL

07000074

-

A4-Q

State: Released

Rev: -.B

P