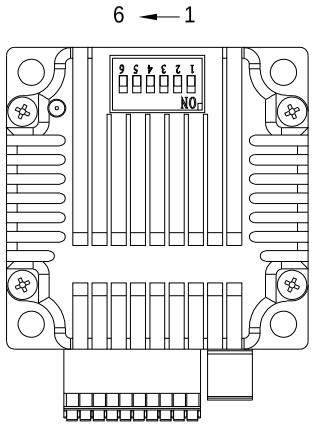


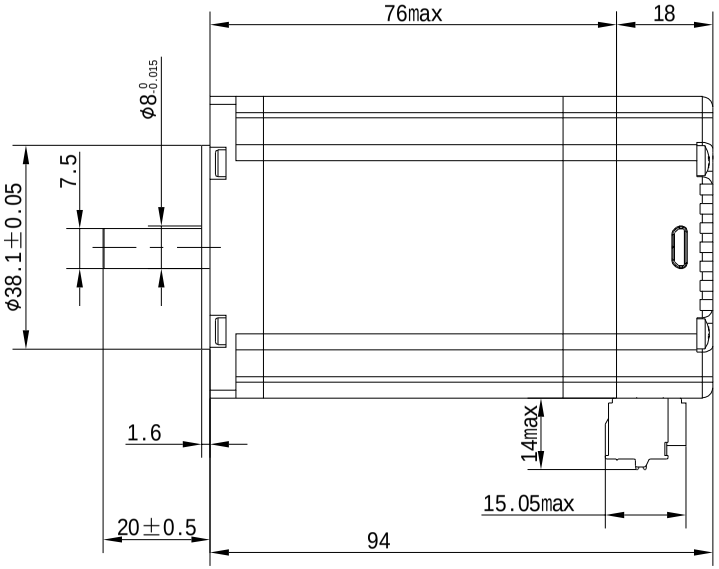


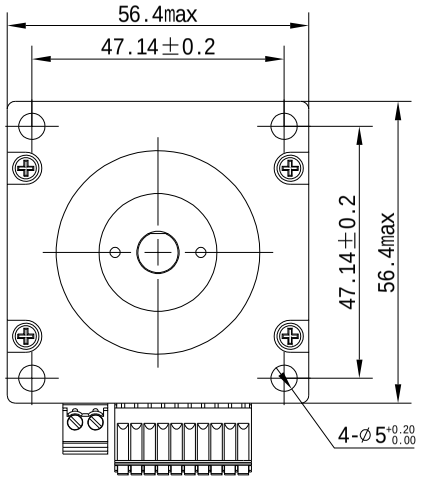


| 脉冲版本Pulse version | | |
|---|---|---|
| PIN No. | Function | Note |
| 1 | 电源正(V+) | 连接电源(24-60VDC) Connecting the power supply |
| 2 | 电源负(V-) | |
| 3 | 脉冲正(PU+) | 输入信号 Input signal |
| 4 | 脉冲负(PU-) | |
| 5 | 方向正(DR+) | |
| 6 | 方向负(DR-) | |
| 7 | 使能正(EN+) | |
| 8 | 使能负(EN-) | |
| 9 | 报警正(AL+) | 输出信号 Output signal |
| 10 | 报警负(AL-) | |
| 11 | 到位正(EX+) | |
| 12 | 到位负(EX-) | |

| 通讯版本Communication version | | |
|---|---|---|
| PIN No. | Function | Note |
| 1 | 电源正(V+) | 连接电源(24-60VDC) Connecting the power supply |
| 2 | 电源负(V-) | |
| 3 | 输入0正(X0+) | 输入信号 Input signal |
| 4 | 输入0负(X0-) | |
| 5 | 输入1正(X1+) | |
| 6 | 输入1负(X1-) | |
| 7 | 输出2正(X2+) | |
| 8 | 输出2负(X2-) | |
| 9 | 输出0正(Y0+) | 输出信号 Output signal |
| 10 | 输出0负(Y0-) | |
| 11 | 485A/CAN_H | |
| 12 | 485B/CAN_L | |

WWW.YANLANMC.COM/info@yanlan.net

# S23HS7630E-X

RoHS COMPLIANT CE

| 版本 Edition | 变更内容 Revisions | 设计 Designed | 日期 DATE |
|---|---|---|---|
| C | | | |
| B | | | |
| A | 初版/First Edition | | |

| | | | |
|---|---|---|---|
| 系列 Series | 57系列一体化电机 | | |
| 批准 Approved | J.Song | 26.08.01 | |
| 审核 Checked | CB.Y | 26.08.01 | |
| 制图 Drawn | QC.Y | 26.08.01 | |